1	1

1	1
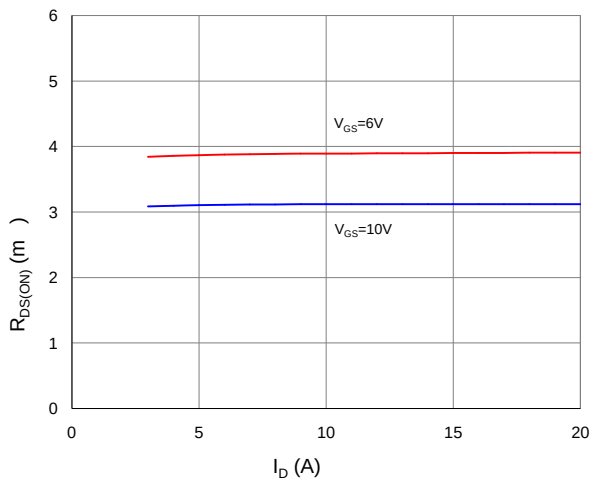	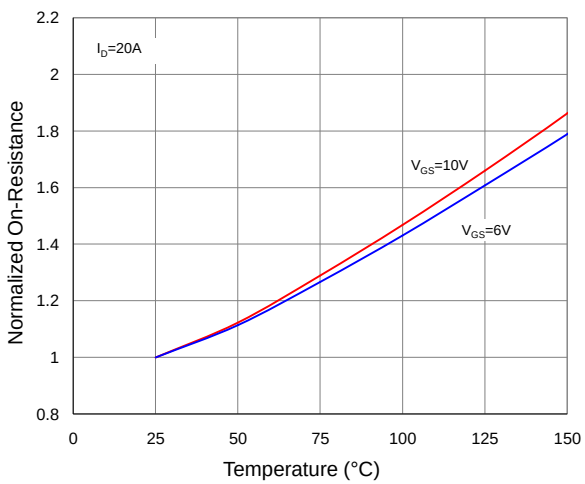

6
5
4
3
2
1
0
0
5
10
15
20
$R_{DS(ON)}$ (m)
I_D (A)
V_{GS}=6V
V_{GS}=10V

2.2
2
1.8
1.6
1.4
1.2
1
0.8
0
25
50
75
100
125
150
Normalized On-Resistance
Temperature (°C)
I_D=20A
V_{GS}=10V
V_{GS}=6V

	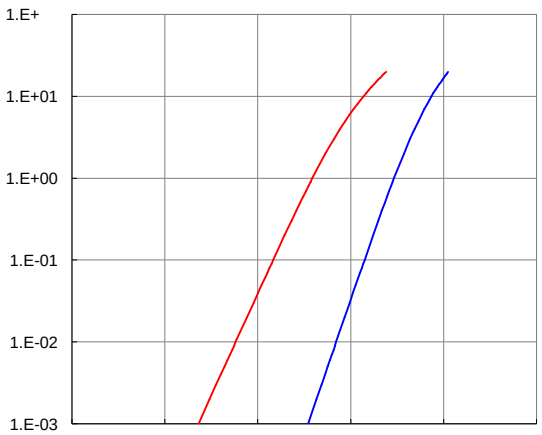

1.E+
1.E+01
1.E+00
1.E-01
1.E-02
1.E-03

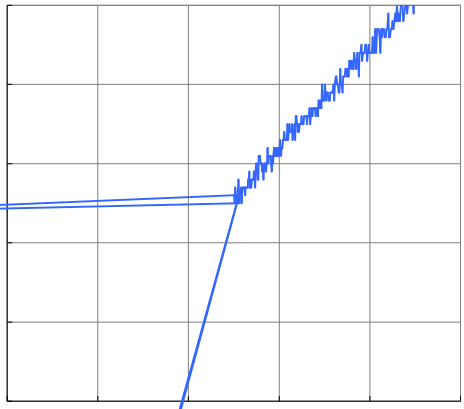

1

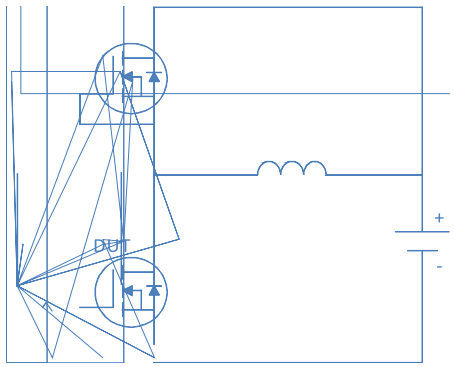
DUT
+
-

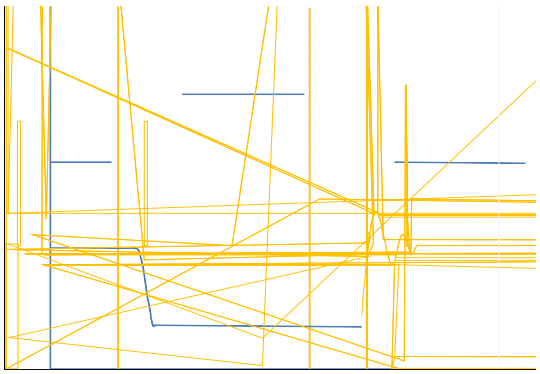

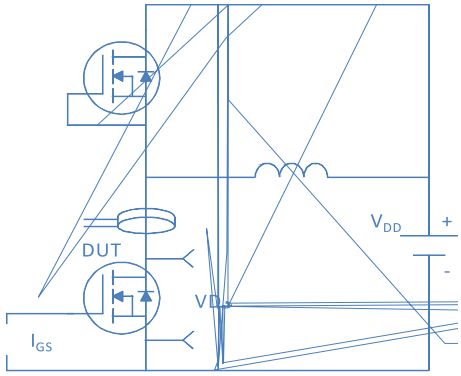
DUT
V_{DD}
+
-
VD
I_{GS}

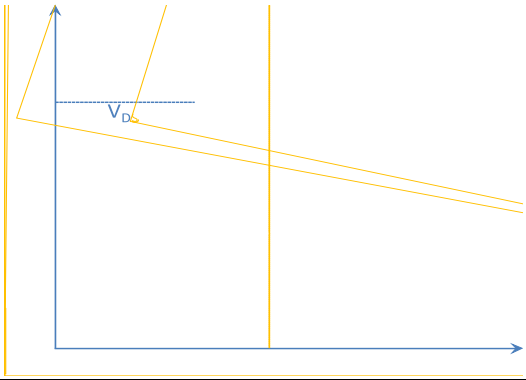
V_{DD}

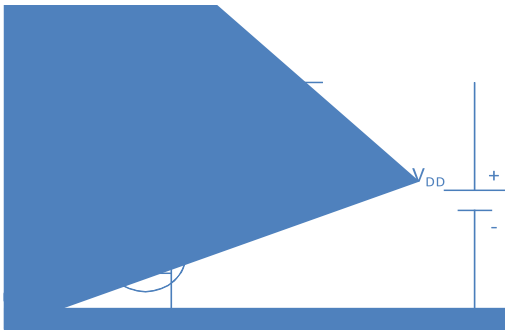
V_{DD}
+
-

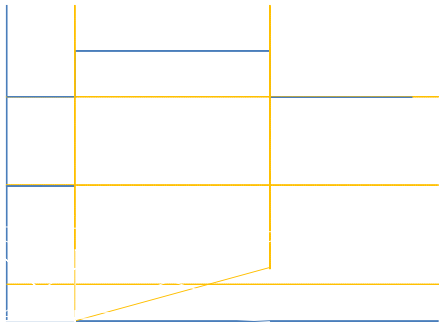

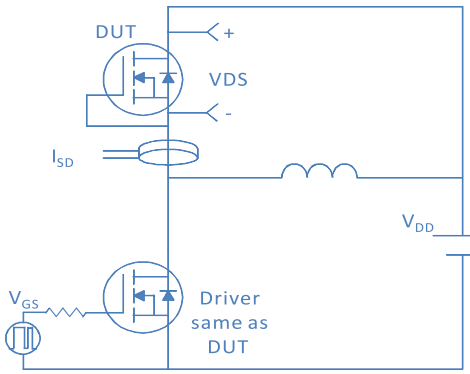
DUT
+
VDS
-
I_{SD}
V_{DD}
+
-
V_{GS}
Driver
same as
DUT

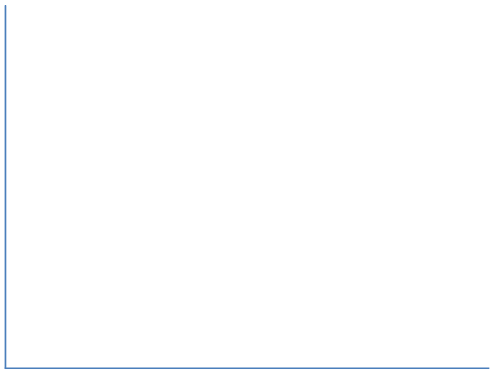

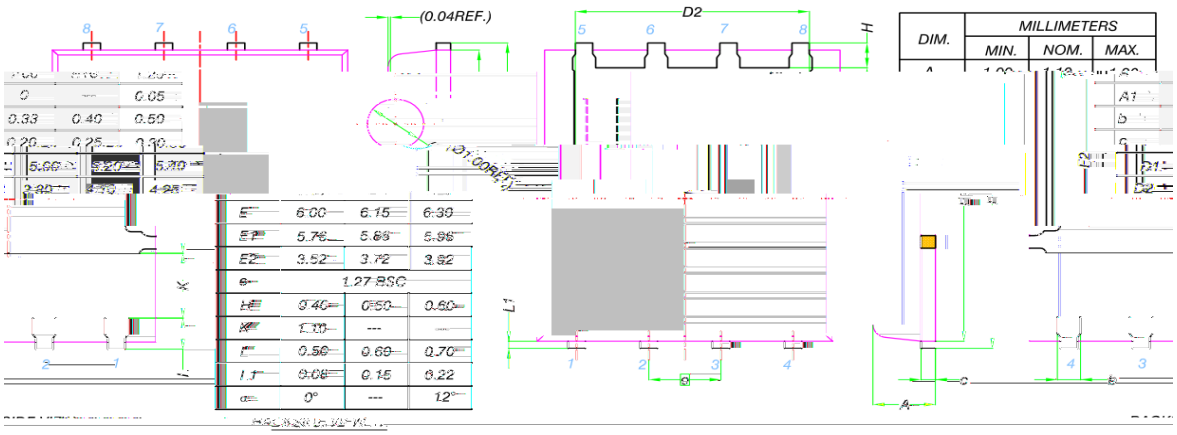
(0.04REF.)
D2
H
DIM.
MILLIMETERS
MIN.
NOM.
MAX.
A1
b
E2
L1
K
E 6.00 6.15 6.30
E1 5.76 5.86 5.96
E2 3.52 3.72 3.92
e 1.27 BSC
h 0.40 0.50 0.60
L 1.00 --- ---
L1 0.56 0.69 0.70
L2 0.08 0.15 0.22
θ 0° --- 12°

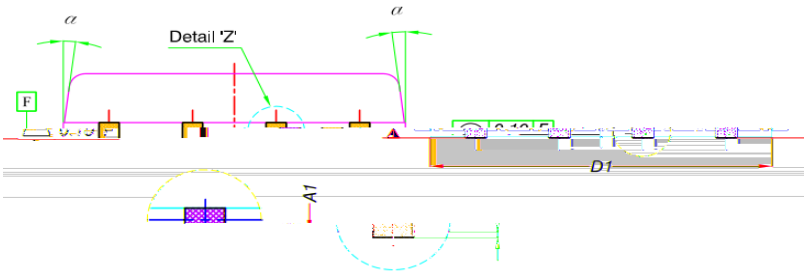
Detail 'Z'
F
D1
A1

Detail 'Z'